GALLONS	99	94	N/A	N/A
LITERS	374	356	N/A	N/A
	TOTAL CAPACITY	USEABLE CAPACITY	TOTAL CAPACITY	USEABLE CAPACITY
	DIESEL FUEL		BIO-DIESEL/ HYDRAULIC/WATER	

REVISIONS				
ZONE	REV.	DESCRIPTION	DATE	APPROVED
	A	INITIAL RELEASE	05/19/2022	ACH

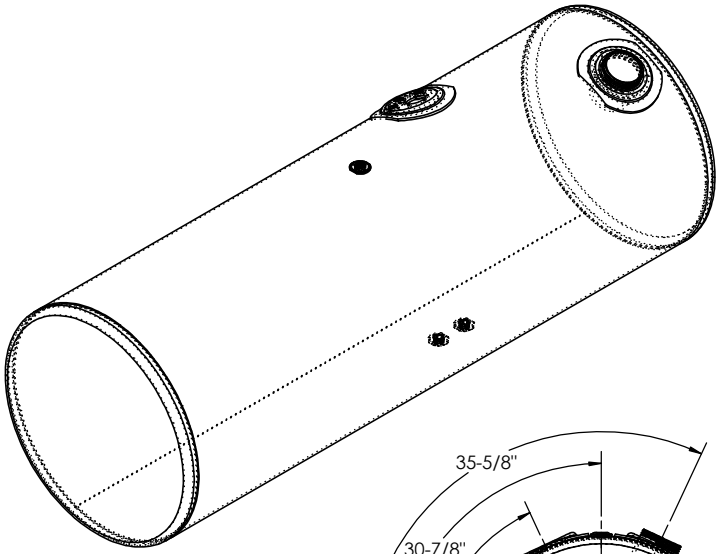

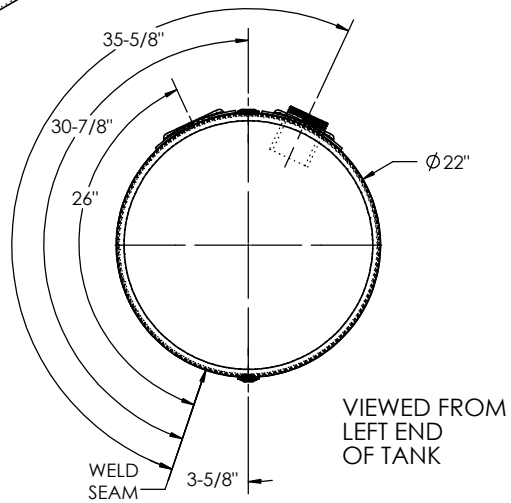

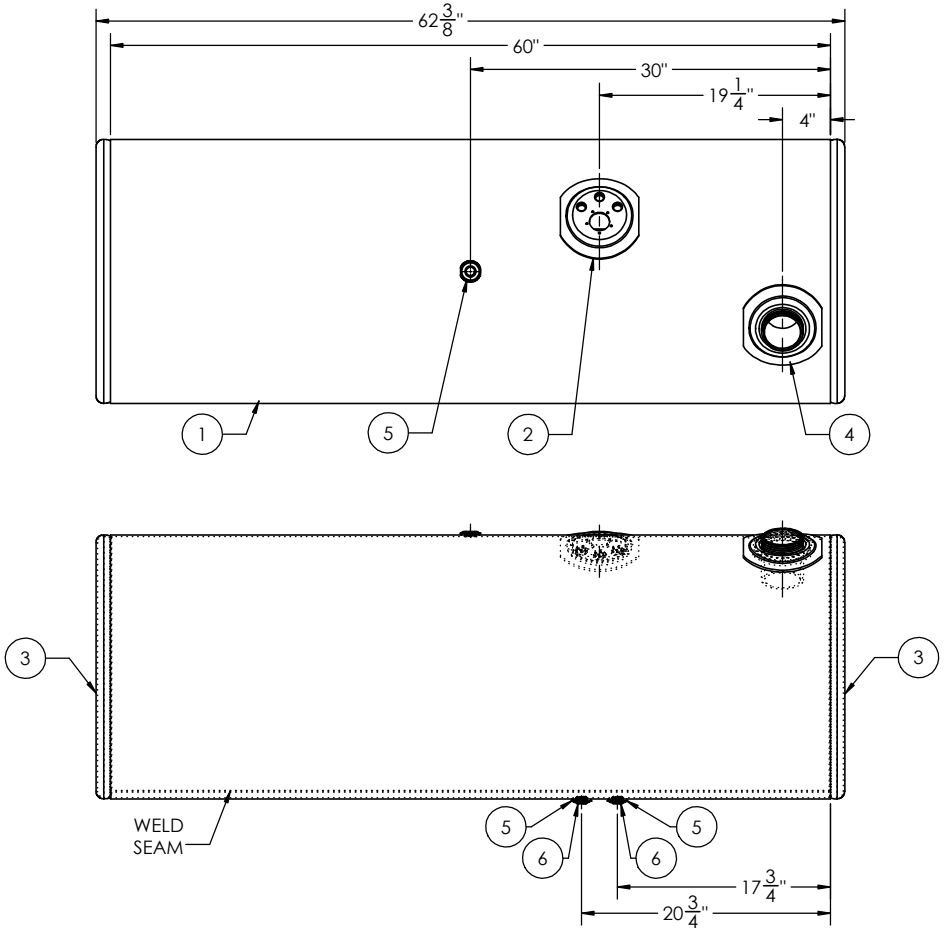

ITEM NO.	PART NUMBER	DESCRIPTION	QTY.
1	BRL-AT-KW-1144	1/8" TANK BARREL	1
2	ADP-832210	MILGRADE ALUMINUM KENWORTH ADAPTER PLATE	1
3	ECP-3520012100	22" MILGRADE ALUMINUM END CAP	2
4	FLN-801212200	MILGRADE ALUMINUM KENWORTH FILL NECK	1
5	FLG-050220	1/2" NPTF MILGRADE ALUMINUM FLANGE	3
6	94135	1/2" SOCKET PIPE PLUG 3/4" TAPER NPTF ZINC	2

KENWORTH PART NUMBER: K422-1034N1422U100

TITLE:

SIZE	REV	QC	INITIALS
C		PSI	
		DIMS	
		PARTS	
		TAG	
		PKG	

PROPRIETARY AND CONFIDENTIAL
THE INFORMATION CONTAINED IN THIS DRAWING IS THE SOLE PROPERTY OF ALUMITANK. ANY REPRODUCTION IN PART OR AS A WHOLE WITHOUT THE WRITTEN PERMISSION OF ALUMITANK IS PROHIBITED.

UNLESS OTHERWISE SPECIFIED:
DIMENSIONS ARE IN INCHES
TOLERANCES:
FRACTIONAL ±
ANGULAR: MACH ± BEND ±
TWO PLACE DECIMAL ±
THREE PLACE DECIMAL ±
INTERPRET GEOMETRIC TOLERANCING PER:
MATERIAL 5052 H32 ALUMINUM
FINISH SEE BOM
DO NOT SCALE DRAWING

	NAME	DATE
DRAWN		
CHECKED		
ENG APPR.		
MFG APPR.		
Q.A.		

COMMENTS:

AlumiTank®
THE BULK TANK SPECIALISTS
11317 N. US HWY 14
HARVARD, IL 60033
815-943-6649
800-652-6630
FAX 855-774-6918
WWW.ALUMITANK.COM
INFO@ALUMITANK.COM

DWG. NO. AT-KW-1144-GAL REV. A

SCALE: 1:8 | WEIGHT: 62.78 | SHEET 1 OF 1