GALLONS	119	113	N/A	N/A
LITERS	450	428	N/A	N/A
	TOTAL CAPACITY	USEABLE CAPACITY	TOTAL CAPACITY	USEABLE CAPACITY
	DIESEL FUEL		BIO-DIESEL/ HYDRAULIC/WATER	

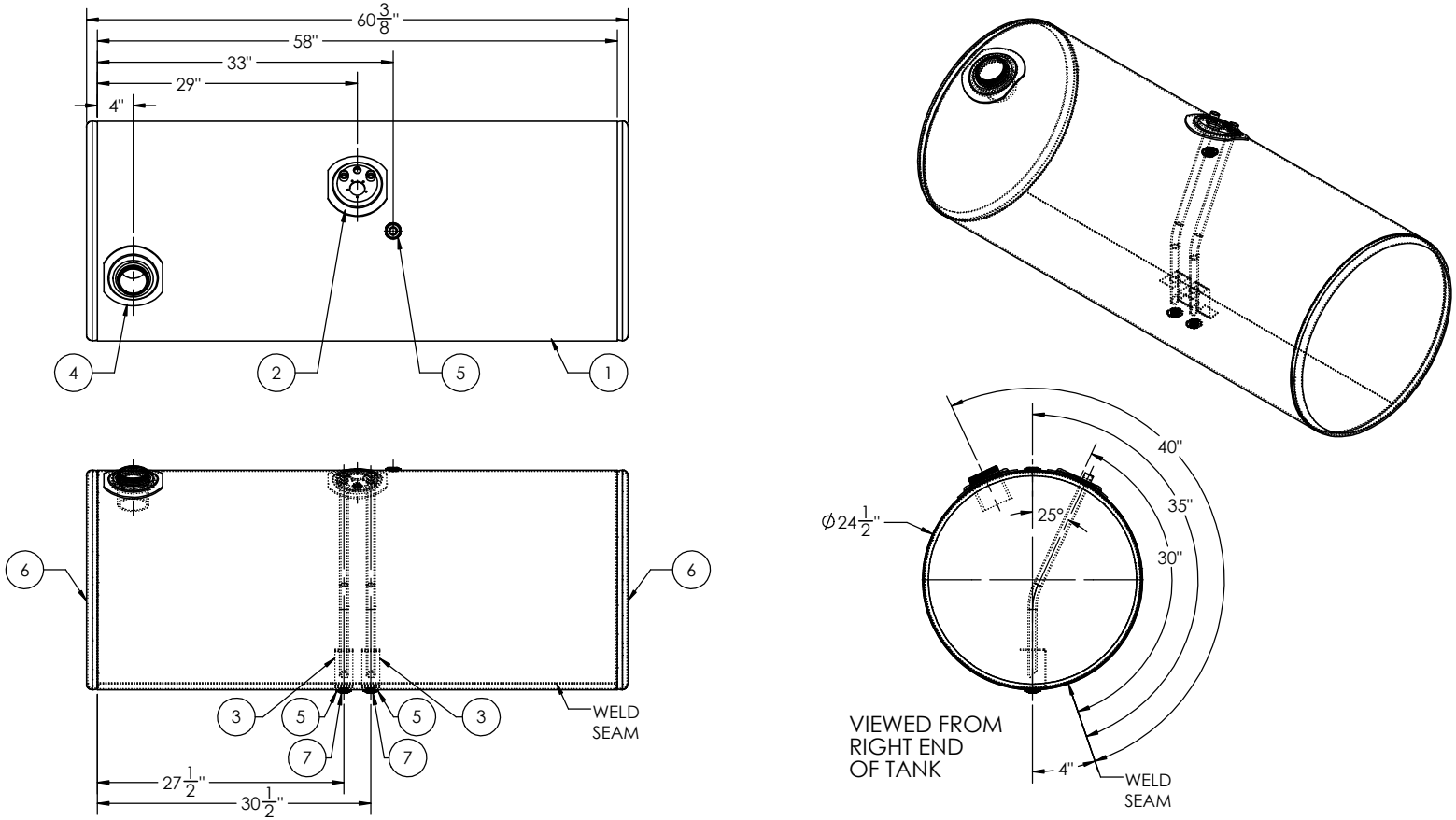

ITEM NO.	PART NUMBER	DESCRIPTION	QTY.
1	BRL-AT-KW-1087	1/8" TANK BARREL	1
2	ADP-83232392	24-1/2" POLISHED ALUMINUM KENWORTH ADAPTER PLATE WITH TUBE	1
3	STR-001 (DIA 24.50 TUBE 1.125)	SMALL TUBE STABILIZER (1.125)	2
4	FLN-801212300	POLISHED ALUMINUM KENWORTH FILL NECK	1
5	FLG-050230	1/2" NPTF POLISHED ALUMINUM FLANGE	3
6	ECP-3920013100	24 1/2" POLISHED ALUMINUM END CAP	2
7	94135	1/2" SOCKET PIPE PLUG 3/4" TAPER NPTF ZINC	2

KENWORTH PART NUMBER: K444-0737N0102U121

TITLE: 24.5"D x 58"L

SIZE: C

REV

QC	INITIALS
PSI	
DIMS	
PARTS	
TAG	
PKG	

PROPRIETARY AND CONFIDENTIAL
THE INFORMATION CONTAINED IN THIS DRAWING IS THE SOLE PROPERTY OF ALUMITANK. ANY REPRODUCTION IN PART OR AS A WHOLE WITHOUT THE WRITTEN PERMISSION OF ALUMITANK IS PROHIBITED.

UNLESS OTHERWISE SPECIFIED:
DIMENSIONS ARE IN INCHES
TOLERANCES:
FRACTIONAL ±
ANGULAR: MACH ± BEND ±
TWO PLACE DECIMAL ±
THREE PLACE DECIMAL ±
INTERPRET GEOMETRIC TOLERANCING PER:
MATERIAL: 5052 H32 ALUMINUM
FINISH: SEE BOM
DO NOT SCALE DRAWING

	NAME	DATE
DRAWN		
CHECKED		
ENG APPR.		
MFG APPR.		
Q.A.		

COMMENTS:

AlumiTank®
THE FUEL TANK SPECIALISTS
11317 N. US HWY 14
HARVARD, IL 60033
815-943-6649
800-652-6630
FAX 855-774-6918
WWW.ALUMITANK.COM
INFO@ALUMITANK.COM

DWG. NO. AT-KW-1087 REV. B

SCALE: 1:10 | WEIGHT: 71.29 | SHEET 2 OF 2