GALLONS	51	49	51	51
LITERS	193	184	193	193
	TOTAL CAPACITY	USEABLE CAPACITY	TOTAL CAPACITY	USEABLE CAPACITY
	DIESEL FUEL		BIO-DIESEL/ HYDRAULIC/WATER	

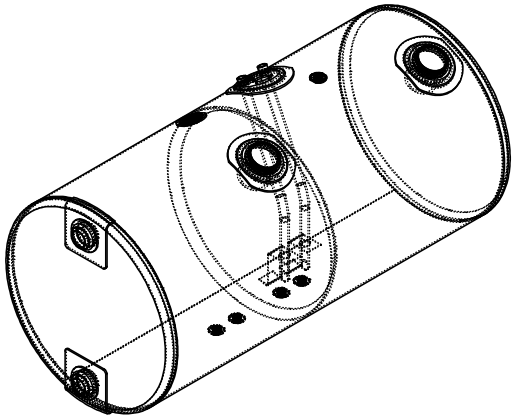

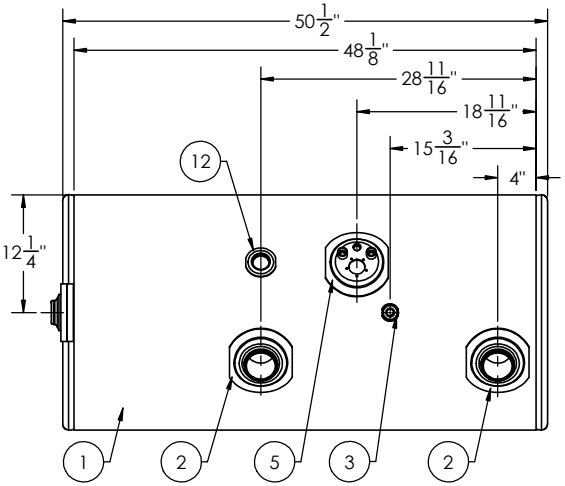

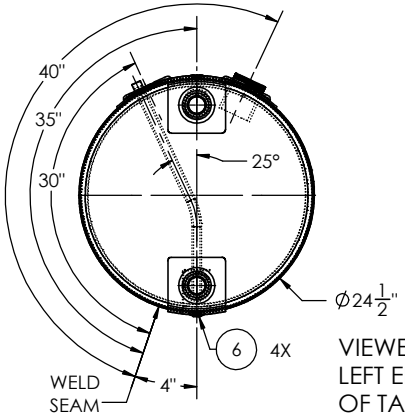

VIEWED FROM LEFT END OF TANK

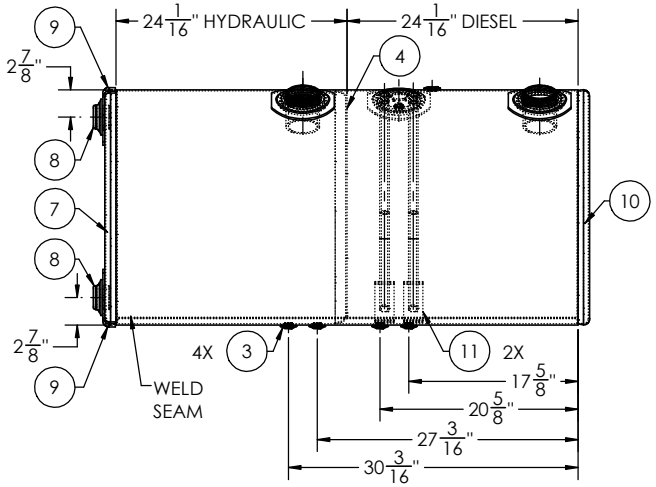

ITEM NO.	PART NUMBER	DESCRIPTION	QTY.
1	00035878	1/8" TANK BARREL	1
2	FLN-801212300	POLISHED ALUMINUM KENWORTH FILL NECK	2
3	FLG-050230	1/2" NPTF POLISHED ALUMINUM FLANGE	5
4	BHD-392001210 (BHD-2450)	24 1/2" MILGRADE ALUMINUM BULKHEAD	1
5	ADP-83232392	24-1/2" POLISHED ALUMINUM KENWORTH ADAPTER PLATE WITH TUBES	1
6	94135	1/2" SOCKET PIPE PLUG 3/4" TAPER NPTF ZINC	4
7	ECP-39200131040 (ECP-2450-2X-1500-HD)	24-1/2" POLISHED ALUMINUM END CAP WITH TWO 1-1/2" HD FLANGES	1
8	FLG-190232	1-1/2" NPTF HEAVY DUTY POLISHED ALUMINUM FLANGE	2
9	RIP-969641610313	6" X 6" X DIA 26" POLISHED ALUMINUM REINFORCEMENT PLATE FOR 1-1/2" HD FLANGE	2
10	ECP-3920013100	24 1/2" POLISHED ALUMINUM END CAP	1
11	STR-001 (DIA 24.50 TUBE 1.125)	SMALL TUBE STABILIZER (1.125)	2
12	FLG-090230	1-1/2" NPTF POLISHED ALUMINUM FLANGE	1

TITLE: 24.5" D x 48.125" L

SIZE: C | REV

QC	INITIALS
PSI	
DIMS	
PARTS	
TAG	
PKG	

PROPRIETARY AND CONFIDENTIAL
THE INFORMATION CONTAINED IN THIS DRAWING IS THE SOLE PROPERTY OF ALUMITANK. ANY REPRODUCTION IN PART OR AS A WHOLE WITHOUT THE WRITTEN PERMISSION OF ALUMITANK IS PROHIBITED.

UNLESS OTHERWISE SPECIFIED:
DIMENSIONS ARE IN INCHES
TOLERANCES:
FRACTIONAL ±
ANGULAR: MACH ± BEND ±
TWO PLACE DECIMAL ±
THREE PLACE DECIMAL ±
INTERPRET GEOMETRIC TOLERANCING PER:
MATERIAL: 5052 H32 ALUMINUM
FINISH: SEE BOM
DO NOT SCALE DRAWING

	NAME	DATE
DRAWN		
CHECKED		
ENG APPR.		
MFG APPR.		
Q.A.		

COMMENTS:

AlumiTank®
THE FUEL TANK SPECIALISTS
11317 N. US HWY 14
HARVARD, IL 60033
815-943-6649
800-652-6630
FAX 855-774-6918
WWW.ALUMITANK.COM
INFO@ALUMITANK.COM

DWG. NO. 00035877 | REV. A

SCALE: 1:10 | WEIGHT: 72.26 | SHEET 2 OF 2