GALLONS	164	156	N/A	N/A
LITERS	621	590	N/A	N/A
	TOTAL CAPACITY	USEABLE CAPACITY	TOTAL CAPACITY	USEABLE CAPACITY
	DIESEL FUEL		BIO-DIESEL/ HYDRAULIC/WATER	

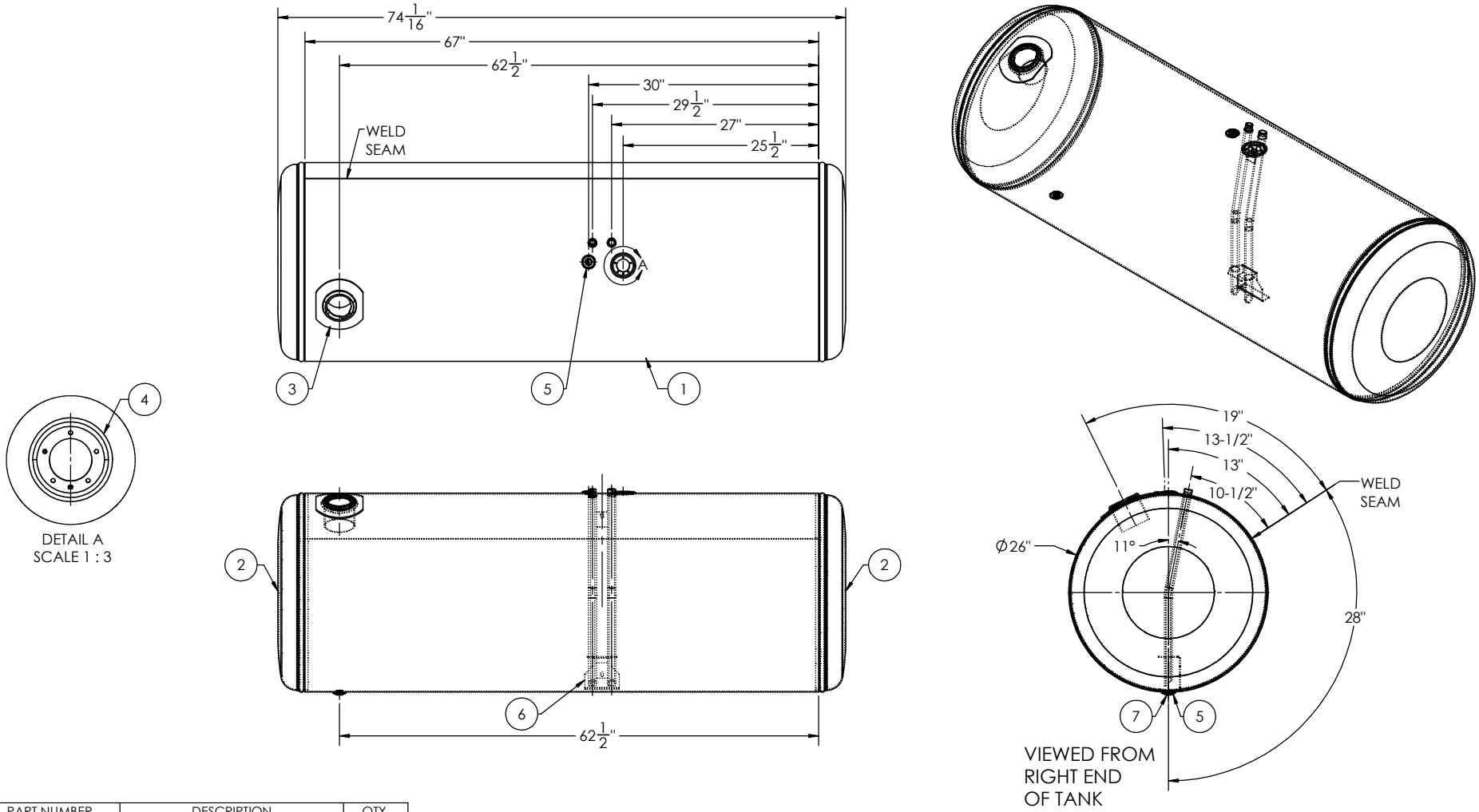

ITEM NO.	PART NUMBER	DESCRIPTION	QTY.
1	00033988	1/8" TANK BARREL	1
2	ECP-4160012200	26" MILGRADE ALUMINUM PETERBILT STYLE END CAP	2
3	FLN-110022200	MILGRADE ALUMINUM PETERBILT FILL NECK	1
4	BSE-00182210	CURVED 90 MILGRADE ALUMINUM SENDER BASE	1
5	FLG-050220	1/2" NPTF MILGRADE ALUMINUM FLANGE	2
6	DTA-311241620	26" MILGRADE PETERBILT TUBE ASSEMBLY	1
7	94135	1/2" SOCKET PIPE PLUG 3/4" TAPER NPTF ZINC	1

TITLE: 26" D x 67" L

SIZE: C

REV

QC	INITIALS
PSI	
DIMS	
PARTS	
TAG	
PKG	

PROPRIETARY AND CONFIDENTIAL
THE INFORMATION CONTAINED IN THIS DRAWING IS THE SOLE PROPERTY OF ALUMITANK. ANY REPRODUCTION IN PART OR AS A WHOLE WITHOUT THE WRITTEN PERMISSION OF ALUMITANK IS PROHIBITED.

UNLESS OTHERWISE SPECIFIED:
DIMENSIONS ARE IN INCHES
TOLERANCES:
FRACTIONAL ±
ANGULAR: MACH ± BEND ±
TWO PLACE DECIMAL ±
THREE PLACE DECIMAL ±
INTERPRET GEOMETRIC TOLERANCING PER:
MATERIAL 5052 H32 ALUMINUM
FINISH SEE BOM
DO NOT SCALE DRAWING

	NAME	DATE
DRAWN		
CHECKED		
ENG APPR.		
MFG APPR.		
Q.A.		

COMMENTS:

AlumiTank®
THE FUEL TANK SPECIALISTS
11317 N. US HWY 14
HARVARD, IL 60033
815-943-6649
800-652-6630
FAX 855-774-6918
WWW.ALUMITANK.COM
INFO@ALUMITANK.COM

DWG. NO. 00033987 REV. A

SCALE: 1:10 | WEIGHT: 87.55 | SHEET 2 OF 2