GALLONS	128	78	N/A	N/A
LITERS	483	459	N/A	N/A
	TOTAL CAPACITY	USEABLE CAPACITY	TOTAL CAPACITY	USEABLE CAPACITY
	DIESEL FUEL		BIO-DIESEL/ HYDRAULIC/WATER	

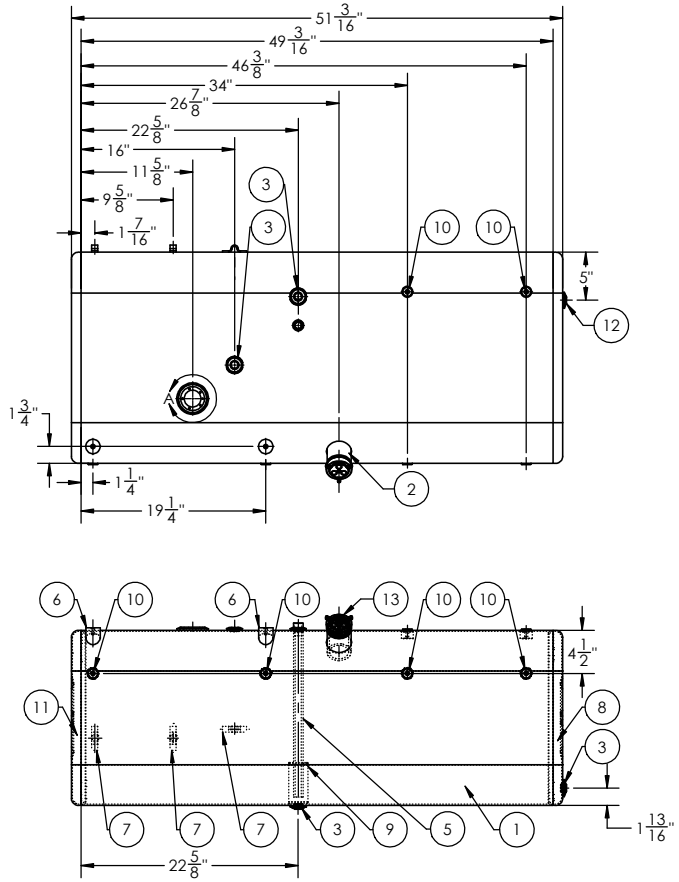

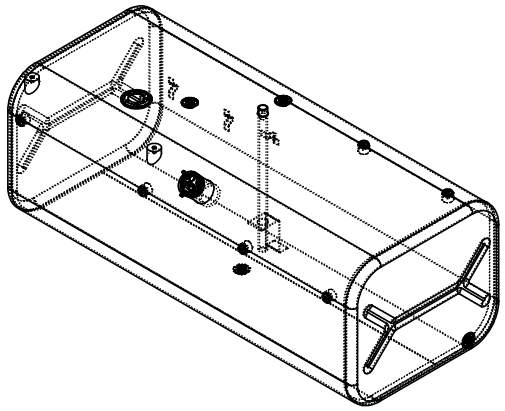

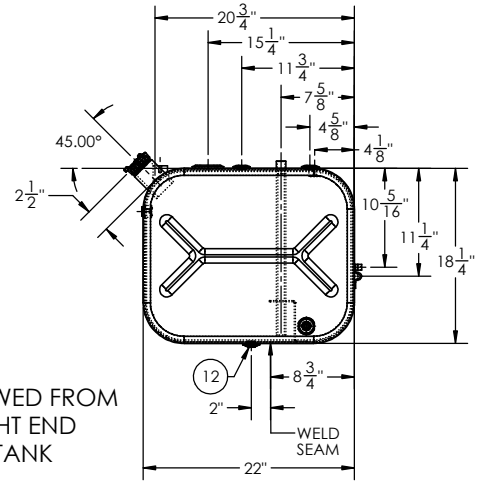

VIEWED FROM RIGHT END OF TANK

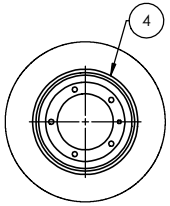

DETAIL A
SCALE 1 : 3

ITEM NO.	PART NUMBER	DESCRIPTION	QTY.
1	BRL-AT-FD-2008	1/8" TANK BARREL	1
2	FLN-0641012230	4" LONG - 2" NPSM - 11.5 TPI MILGRADE ALUMINUM FILL NECK	1
3	FLG-050220	1/2" NPTF MILGRADE ALUMINUM FLANGE	4
4	BSE-00182230	FLAT MILGRADE ALUMINUM SENDER BASE	1
5	TBS-503200-1825	1/2" NPTF STRAIGHT ALUMINUM TUBE	1
6	STB-392241	5/16-18 MILGRADE ALUMINUM CURVED SHORT STEP BUSHING	2
7	MSC-001	MILGRADE ALUMINUM HOSE CLIP	3
8	ECP-1822-RIGHT-5.00	18-1/4" X 22" MILGRADE ALUMINUM RECTANGULAR END CAP WITH 1/2" FLANGE	1
9	STR-001 (FLAT 1.125)	SMALL TUBE STABILIZER (1.125)	1
10	STB-482250	3/8-16 MILGRADE ALUMINUM FLAT STEP BUSHING	6
11	ECP-029235212600	18-1/4" X 22" MILGRADE ALUMINUM RECTANGULAR END CAP	1
12	94135	1/2" SOCKET PIPE PLUG 3/4" TAPER NPTF ZINC	2
13	FCP-1330 (600133)	2" NON-VENTED, NON-LOCK CAP	1

FORD PART NUMBER: F6HT-9002-BLC

TITLE: 18.25" H x 22" W x 49.1875"

SIZE	REV
C	

QC	INITIALS
PSI	
DIMS	
PARTS	
TAG	
PKG	

PROPRIETARY AND CONFIDENTIAL
THE INFORMATION CONTAINED IN THIS DRAWING IS THE SOLE PROPERTY OF ALUMITANK. ANY REPRODUCTION IN PART OR AS A WHOLE WITHOUT THE WRITTEN PERMISSION OF ALUMITANK IS PROHIBITED.

UNLESS OTHERWISE SPECIFIED:
DIMENSIONS ARE IN INCHES
TOLERANCES:
FRACTIONAL ±
ANGULAR: MACH ± BEND ±
TWO PLACE DECIMAL ±
THREE PLACE DECIMAL ±
INTERPRET GEOMETRIC TOLERANCING PER:
MATERIAL 5052 H32 ALUMINUM
FINISH SEE BOM
DO NOT SCALE DRAWING

	NAME	DATE
DRAWN		
CHECKED		
ENG APPR.		
MFG APPR.		
Q.A.		

COMMENTS:

AlumiTank®
THE FUEL TANK SPECIALISTS
11317 N. US HWY 14
HARVARD, IL 60033
815-943-6649
800-652-6630
FAX 855-774-6918
WWW.ALUMITANK.COM
INFO@ALUMITANK.COM

DWG. NO. AT-FD-2008 REV. B

SCALE: 1:10 | WEIGHT: 57.98 | SHEET 2 OF 2