GALLONS	61	58	61	61
LITERS	231	219	231	231
	TOTAL CAPACITY	USEABLE CAPACITY	TOTAL CAPACITY	USEABLE CAPACITY
	DIESEL FUEL		BIO-DIESEL/ HYDRAULIC/WATER	

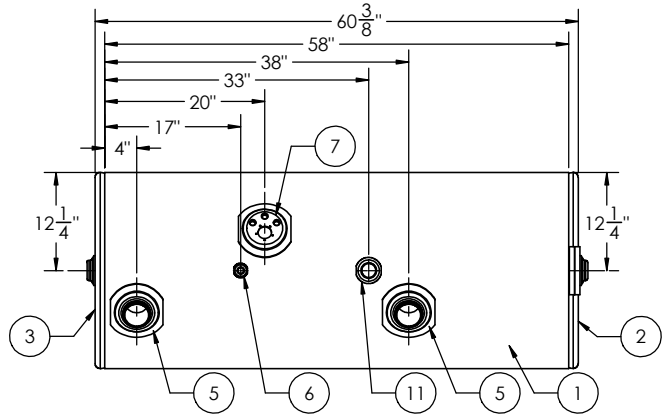

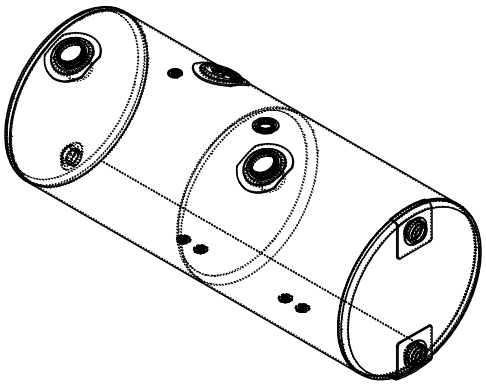

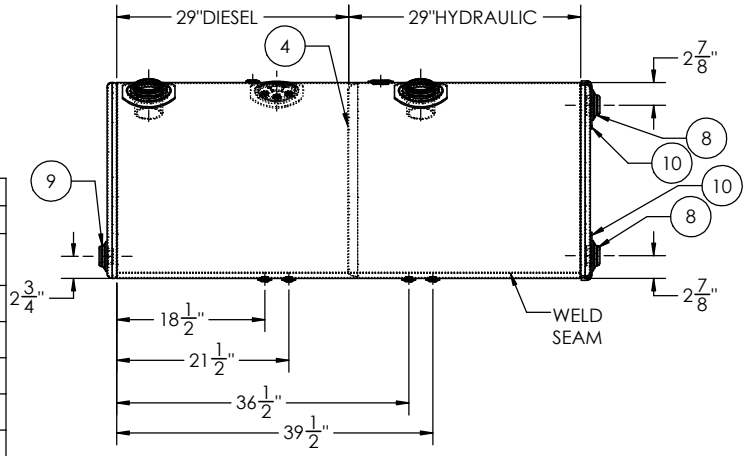

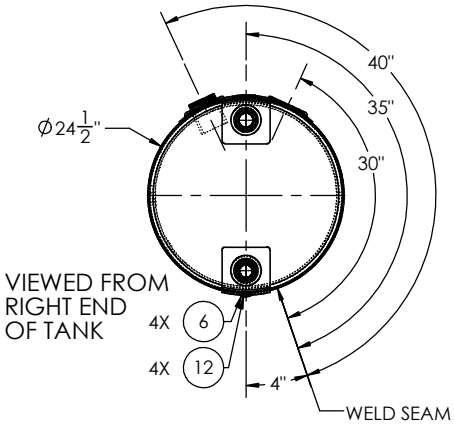

ITEM NO.	PART NUMBER	DESCRIPTION	QTY.
1	BRL-AT-KW-1163	1/8" TANK BARREL	1
2	ECP-39200131040 (ECP-2450-2X-1500-HD)	24-1/2" POLISHED ALUMINUM END CAP WITH TWO 1-1/2" HD FLANGES	1
3	ECP-39200131029	24-1/2" POLISHED ALUMINUM END CAP WITH 1-1/4" HD FLANGE	1
4	BHD-392001210 (BHD-2450)	24 1/2" MILGRADE ALUMINUM BULKHEAD	1
5	FLN-801212300	POLISHED ALUMINUM KENWORTH FILL NECK	2
6	FLG-050230	1/2" NPTF POLISHED ALUMINUM FLANGE	5
7	ADP-832310	POLISHED ALUMINUM KENWORTH ADAPTER PLATE	1
8	FLG-190232	1-1/2" NPTF HEAVY DUTY POLISHED ALUMINUM FLANGE	2
9	FLG-180232	1 1/4" NPTF HEAVY DUTY POLISHED ALUMINUM FLANGE	1
10	RIP-969641610313	6" X 6" X DIA 26" POLISHED ALUMINUM REINFORCEMENT PLATE FOR 1-1/2" HD FLANGE	2
11	FLG-090230	1-1/2" NPTF POLISHED ALUMINUM FLANGE	1
12	94135	1/2" SOCKET PIPE PLUG 3/4" TAPER NPTF ZINC	4

KENWORTH PART NUMBER: K239-2877-13

TITLE: 24.5" D x 58" L

SIZE: C | REV

QC	INITIALS
PSI	
DIMS	
PARTS	
TAG	
PKG	

PROPRIETARY AND CONFIDENTIAL
THE INFORMATION CONTAINED IN THIS DRAWING IS THE SOLE PROPERTY OF ALUMITANK. ANY REPRODUCTION IN PART OR AS A WHOLE WITHOUT THE WRITTEN PERMISSION OF ALUMITANK IS PROHIBITED.

UNLESS OTHERWISE SPECIFIED:
DIMENSIONS ARE IN INCHES
TOLERANCES:
FRACTIONAL ±
ANGULAR: MACH ± BEND ±
TWO PLACE DECIMAL ±
THREE PLACE DECIMAL ±
INTERPRET GEOMETRIC TOLERANCING PER:
MATERIAL: 5052 H32 ALUMINUM
FINISH: SEE BOM
DO NOT SCALE DRAWING

	NAME	DATE
DRAWN		
CHECKED		
ENG APPR.		
MFG APPR.		
Q.A.		

COMMENTS:

AlumiTank® THE FUEL TANK SPECIALISTS
11317 N. US HWY 14
HARVARD, IL 60033
815-943-6649
800-652-6630
FAX 855-774-6918
WWW.ALUMITANK.COM
INFO@ALUMITANK.COM

DWG. NO. AT-KW-1163 | REV. A

SCALE: 1:12 | WEIGHT: 79.66 | SHEET 1 OF 1