| | | | | |
|---|---|---|---|---|
| GALLONS | 125 | 119 | N/A | N/A |
| LITERS | 473 | 449 | N/A | N/A |
| | TOTAL CAPACITY | USEABLE CAPACITY | TOTAL CAPACITY | USEABLE CAPACITY |
| | DIESEL FUEL | | BIO-DIESEL/ HYDRAULIC/WATER | |

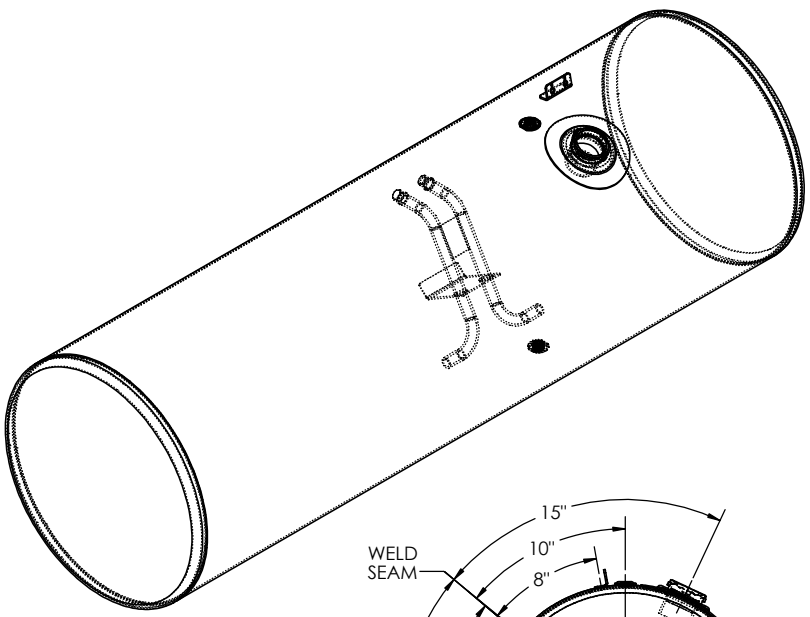

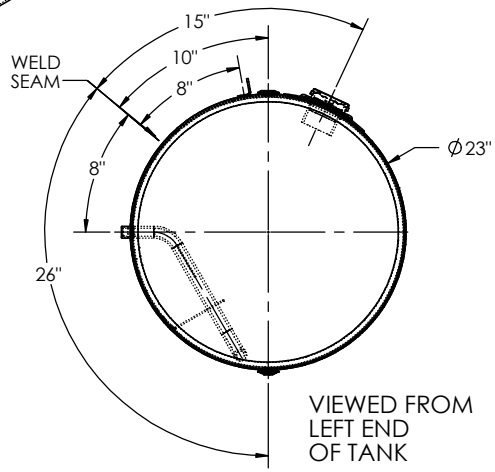


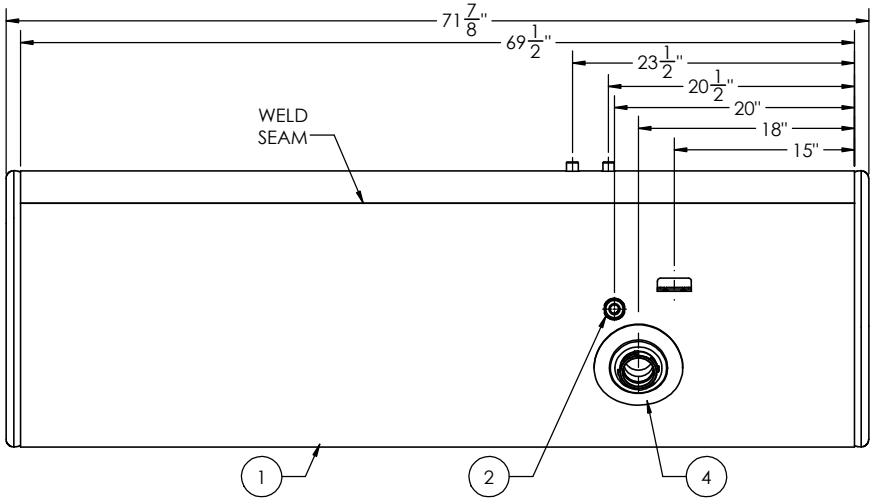


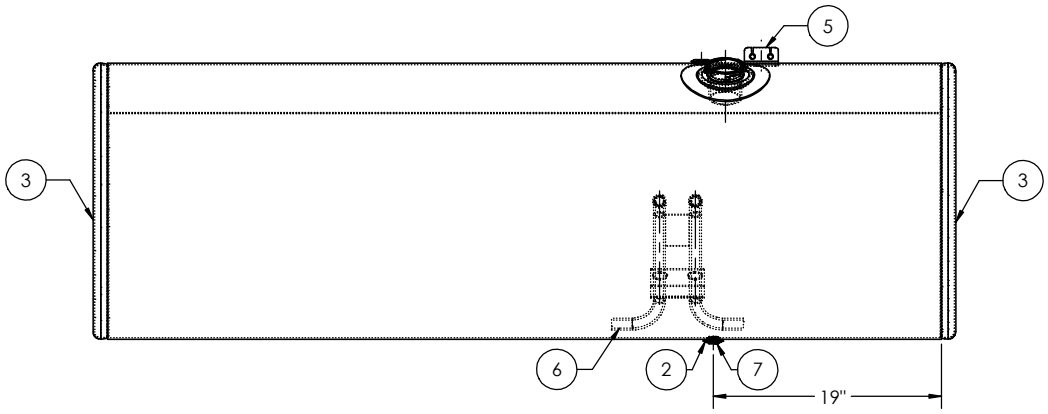


| ITEM NO. | PART NUMBER | DESCRIPTION | QTY. |
|---|---|---|---|
| 1 | BRL-AT-FL-1007 | 1/8" TANK BARREL | 1 |
| 2 | FLG-050220 | 1/2" NPTF MILGRADE ALUMINUM FLANGE | 2 |
| 3 | ECP-3680012100 | 23" MILGRADE ALUMINUM END CAP | 2 |
| 4 | FLN-20022240 | MILGRADE ALUMINUM FREIGHTLINER CAM LOCK FILL NECK - ROUND | 1 |
| 5 | MSC-005 | MILGRADE ALUMINUM WIRE CLIP | 1 |
| 6 | DTA-22236800 | 23" DITCH FREIGHTLINER TUBE ASSEMBLY | 1 |
| 7 | 94135 | 1/2" SOCKET PIPE PLUG 3/4" TAPER NPTF ZINC | 1 |

TITLE: 23" D x 69.5" L

SIZE: C

REV

| QC | INITIALS |
|---|---|
| PSI | |
| DIMS | |
| PARTS | |
| TAG | |
| PKG | |

PROPRIETARY AND CONFIDENTIAL
THE INFORMATION CONTAINED IN THIS DRAWING IS THE SOLE PROPERTY OF ALUMITANK. ANY REPRODUCTION IN PART OR AS A WHOLE WITHOUT THE WRITTEN PERMISSION OF ALUMITANK IS PROHIBITED.

UNLESS OTHERWISE SPECIFIED:
DIMENSIONS ARE IN INCHES
TOLERANCES:
FRACTIONAL ±
ANGULAR: MACH ± BEND ±
TWO PLACE DECIMAL ±
THREE PLACE DECIMAL ±
INTERPRET GEOMETRIC TOLERANCING PER:
MATERIAL 5052 H32 ALUMINUM
FINISH SEE BOM
DO NOT SCALE DRAWING

| | NAME | DATE |
|---|---|---|
| DRAWN | | |
| CHECKED | | |
| ENG APPR. | | |
| MFG APPR. | | |
| Q.A. | | |

COMMENTS:

AlumiTank®
THE FUEL TANK SPECIALISTS
11317 N. US HWY 14
HARVARD, IL 60033
815-943-6649
800-652-6630
FAX 855-774-6918
WWW.ALUMITANK.COM
INFO@ALUMITANK.COM

DWG. NO. AT-FL-1007 REV. A

SCALE: 1:8 | WEIGHT: 75.01 | SHEET 1 OF 1