GALLONS	105	99	N/A	N/A
LITERS	396	376	N/A	N/A
	TOTAL CAPACITY	USEABLE CAPACITY	TOTAL CAPACITY	USEABLE CAPACITY
	DIESEL FUEL		BIO-DIESEL/ HYDRAULIC/WATER	

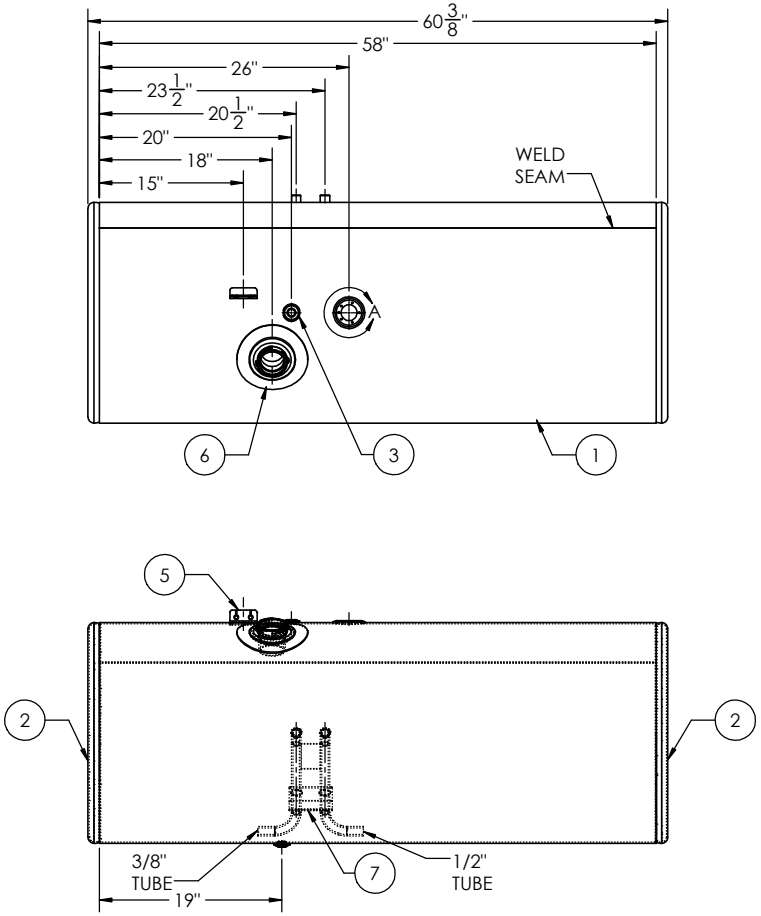

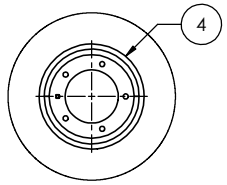

DETAIL A
SCALE 1 : 3

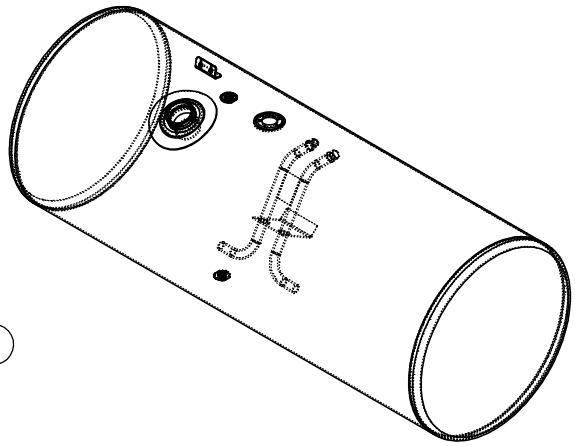

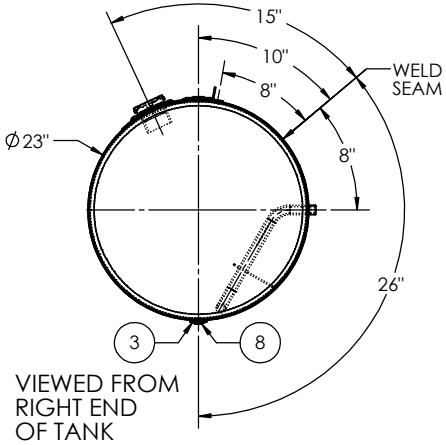

VIEWED FROM RIGHT END OF TANK

ITEM NO.	PART NUMBER	DESCRIPTION	QTY.
1	BRL-AT-FL-1001	1/8" TANK BARREL	1
2	ECP-3680012100	23" MILGRADE ALUMINUM END CAP	2
3	FLG-050220	1/2" NPTF MILGRADE ALUMINUM FLANGE	2
4	BSE-00182220	CURVED MILGRADE ALUMINUM SENDER BASE	1
5	MSC-005	MILGRADE ALUMINUM WIRE CLIP	1
6	FLN-20022240	MILGRADE ALUMINUM FREIGHTLINER CAM LOCK FILL NECK - ROUND	1
7	DTA-12236800	23" DRIVER FREIGHTLINER TUBE ASSEMBLY	1
8	94135	1/2" SOCKET PIPE PLUG 3/4" TAPER NPTF ZINC	1

FREIGHTLINER PART NUMBER: A03-26241-181

TITLE: 23" D x 58" L

SIZE: C | REV | QC | INITIALS
PSI
DIMS
PARTS
TAG
PKG

PROPRIETARY AND CONFIDENTIAL
THE INFORMATION CONTAINED IN THIS DRAWING IS THE SOLE PROPERTY OF ALUMITANK. ANY REPRODUCTION IN PART OR AS A WHOLE WITHOUT THE WRITTEN PERMISSION OF ALUMITANK IS PROHIBITED.

UNLESS OTHERWISE SPECIFIED:
DIMENSIONS ARE IN INCHES
TOLERANCES:
FRACTIONAL ±
ANGULAR: MACH ± BEND ±
TWO PLACE DECIMAL ±
THREE PLACE DECIMAL ±
INTERPRET GEOMETRIC TOLERANCING PER:
MATERIAL 5052 H32 ALUMINUM
FINISH SEE BOM
DO NOT SCALE DRAWING

	NAME	DATE
DRAWN		
CHECKED		
ENG APPR.		
MFG APPR.		
Q.A.		

COMMENTS:

AlumiTank®
THE FUEL TANK SPECIALISTS
11317 N. US HWY 14
HARVARD, IL 60033
815-943-6649
800-652-6630
FAX 855-774-6918
WWW.ALUMITANK.COM
INFO@ALUMITANK.COM

DWG. NO. AT-FL-1001 | REV. A

SCALE: 1:10 | WEIGHT: 65.06 | SHEET 1 OF 1