GALLONS	118	112	N/A	N/A
LITERS	447	425	N/A	N/A
	TOTAL CAPACITY	USEABLE CAPACITY	TOTAL CAPACITY	USEABLE CAPACITY
	DIESEL FUEL		BIO-DIESEL/ HYDRAULIC/WATER	

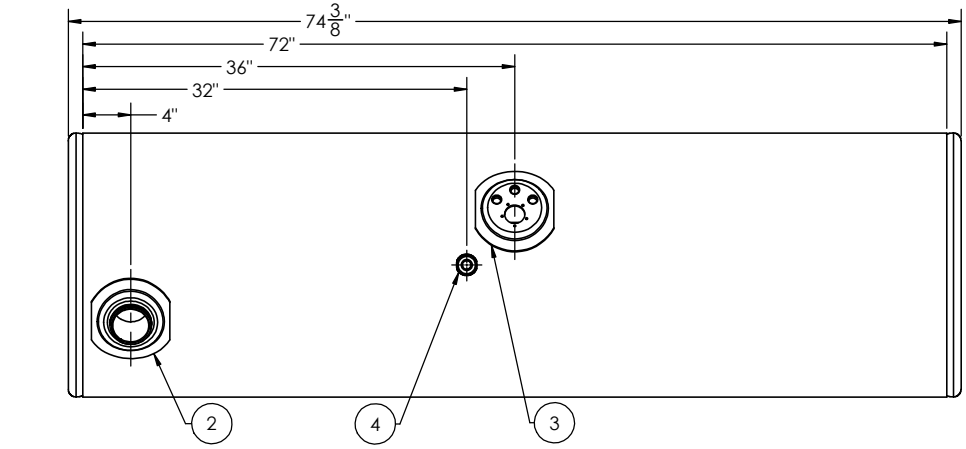

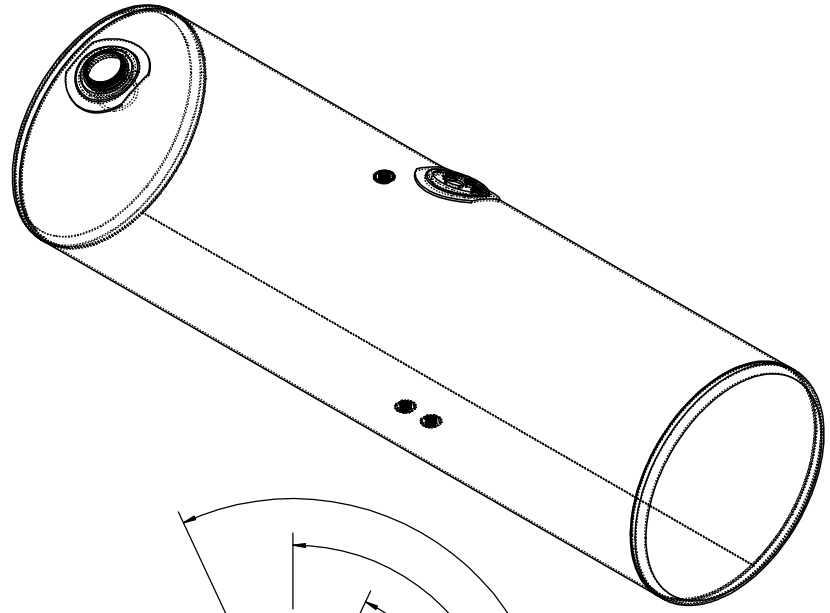

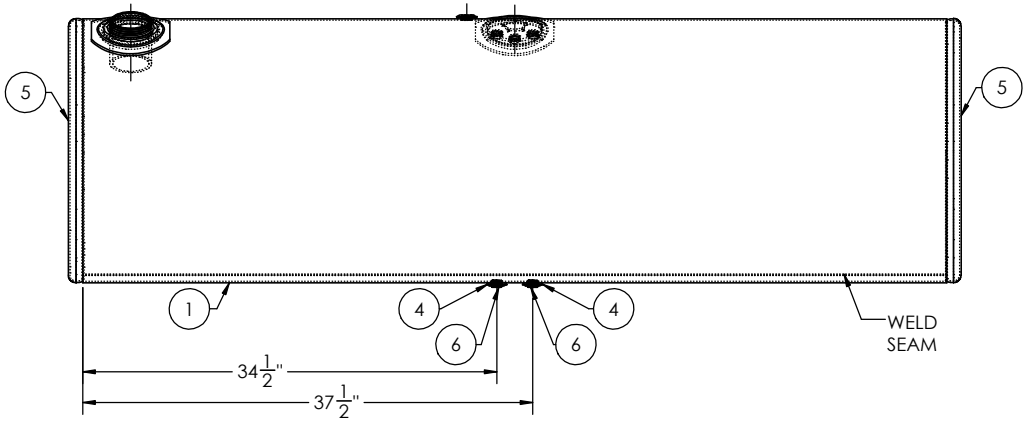

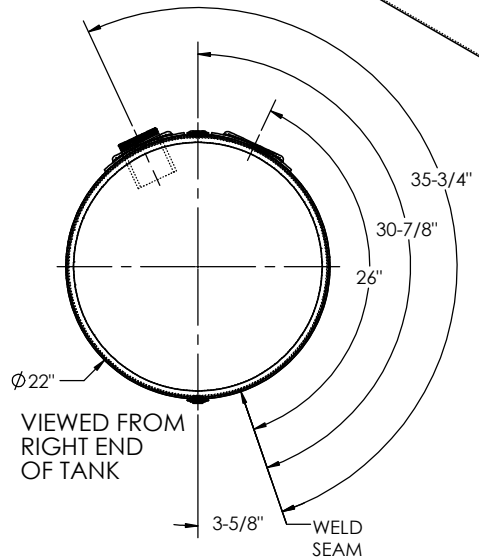

ITEM NO.	PART NUMBER	DESCRIPTION	QTY.
1	00003984	1/8" TANK BARREL	1
2	FLN-801212300	POLISHED ALUMINUM KENWORTH FILL NECK	1
3	ADP-832310	POLISHED ALUMINUM KENWORTH ADAPTER PLATE	1
4	FLG-050230	1/2" NPTF POLISHED ALUMINUM FLANGE	3
5	ECP-3520013100	22" POLISHED ALUMINUM END CAP	2
6	94135	1/2" SOCKET PIPE PLUG 3/4" TAPER NPTF ZINC	2

TITLE: 22" D x 72" L

SIZE: C

REV

QC	INITIALS
PSI	
DIMS	
PARTS	
TAG	
PKG	

PROPRIETARY AND CONFIDENTIAL
THE INFORMATION CONTAINED IN THIS DRAWING IS THE SOLE PROPERTY OF ALUMITANK. ANY REPRODUCTION IN PART OR AS A WHOLE WITHOUT THE WRITTEN PERMISSION OF ALUMITANK IS PROHIBITED.

UNLESS OTHERWISE SPECIFIED:
DIMENSIONS ARE IN INCHES
TOLERANCES:
FRACTIONAL ±
ANGULAR: MACH ± BEND ±
TWO PLACE DECIMAL ±
THREE PLACE DECIMAL ±
INTERPRET GEOMETRIC TOLERANCING PER:
MATERIAL 5052 H32 ALUMINUM
FINISH SEE BOM
DO NOT SCALE DRAWING

	NAME	DATE
DRAWN		
CHECKED		
ENG APPR.		
MFG APPR.		
Q.A.		

COMMENTS:

AlumiTank®
THE FUEL TANK SPECIALISTS
11317 N. US HWY 14
HARVARD, IL 60033
815-943-6649
800-652-6630
FAX 855-774-6918
WWW.ALUMITANK.COM
INFO@ALUMITANK.COM

DWG. NO. 00003983 REV. A

SCALE: 1:8 | WEIGHT: 72.75 | SHEET 2 OF 2